Applications of Cavity QED

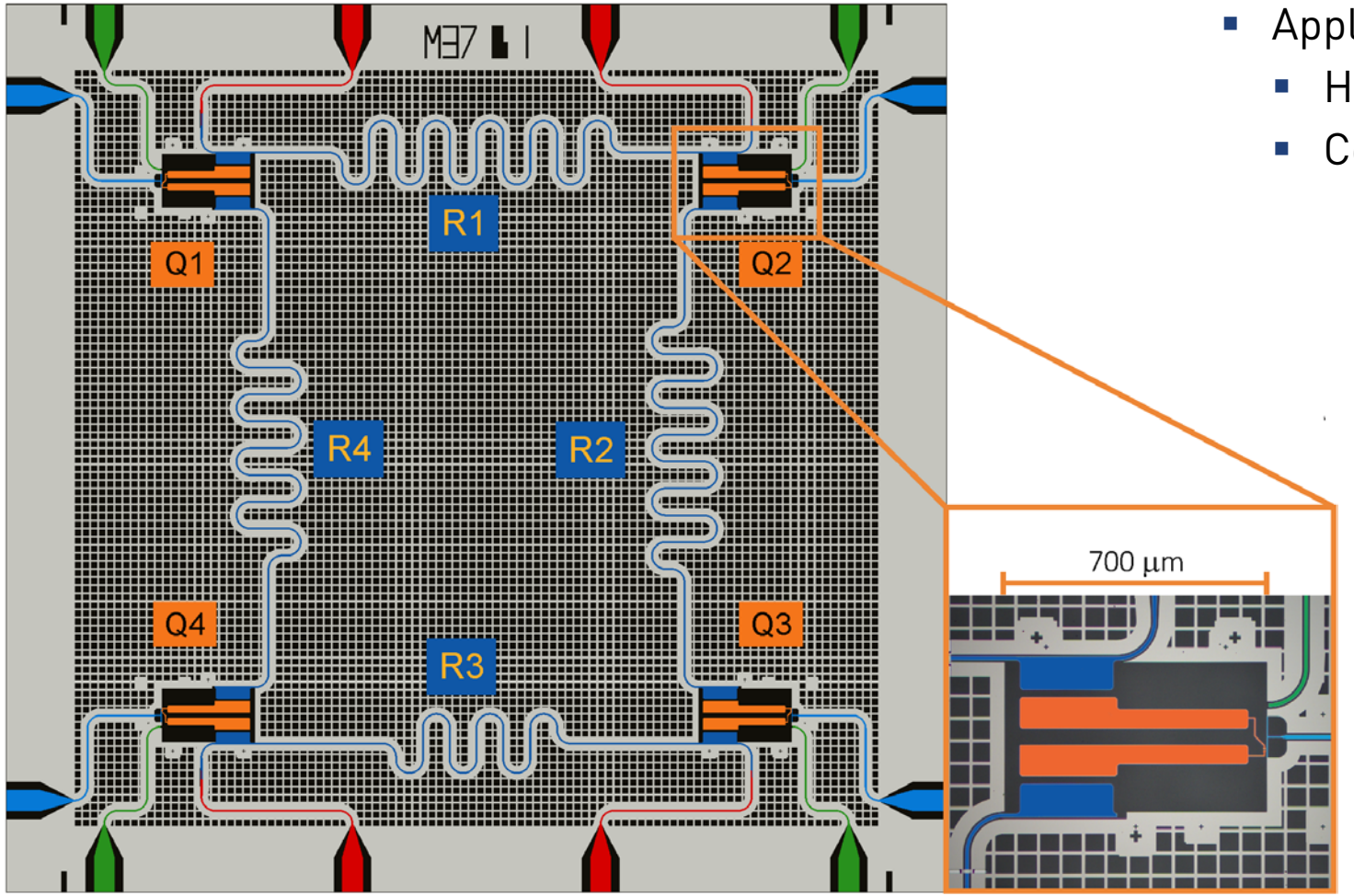

Building a quantum computer from electronic circuits

- Applications of cavity QED
  - High fidelity dispersive read-out
  - Coupling qubits and realizing 2-qubit gates

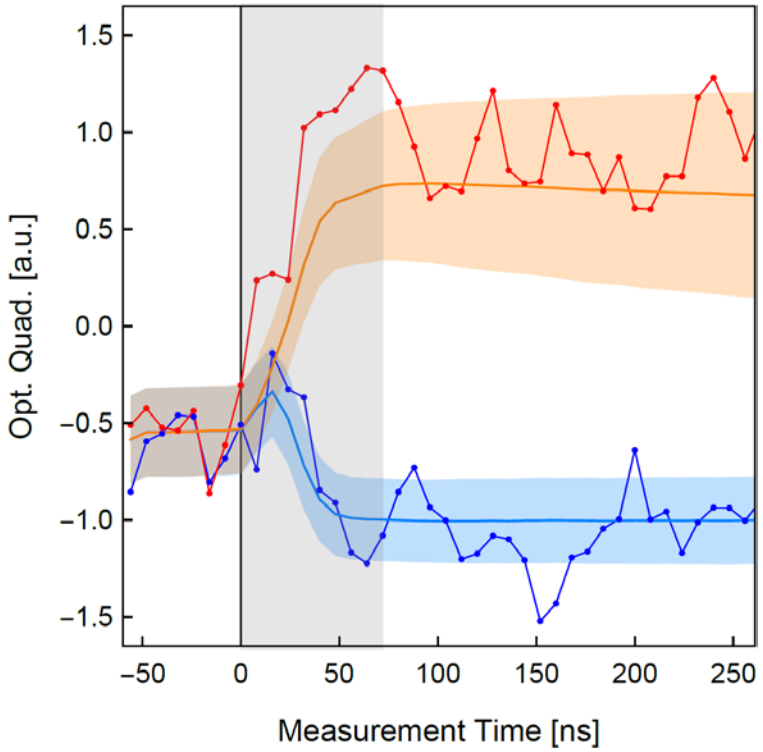

Read-Out ...

... of superconducting qubits

Qubit Read Out

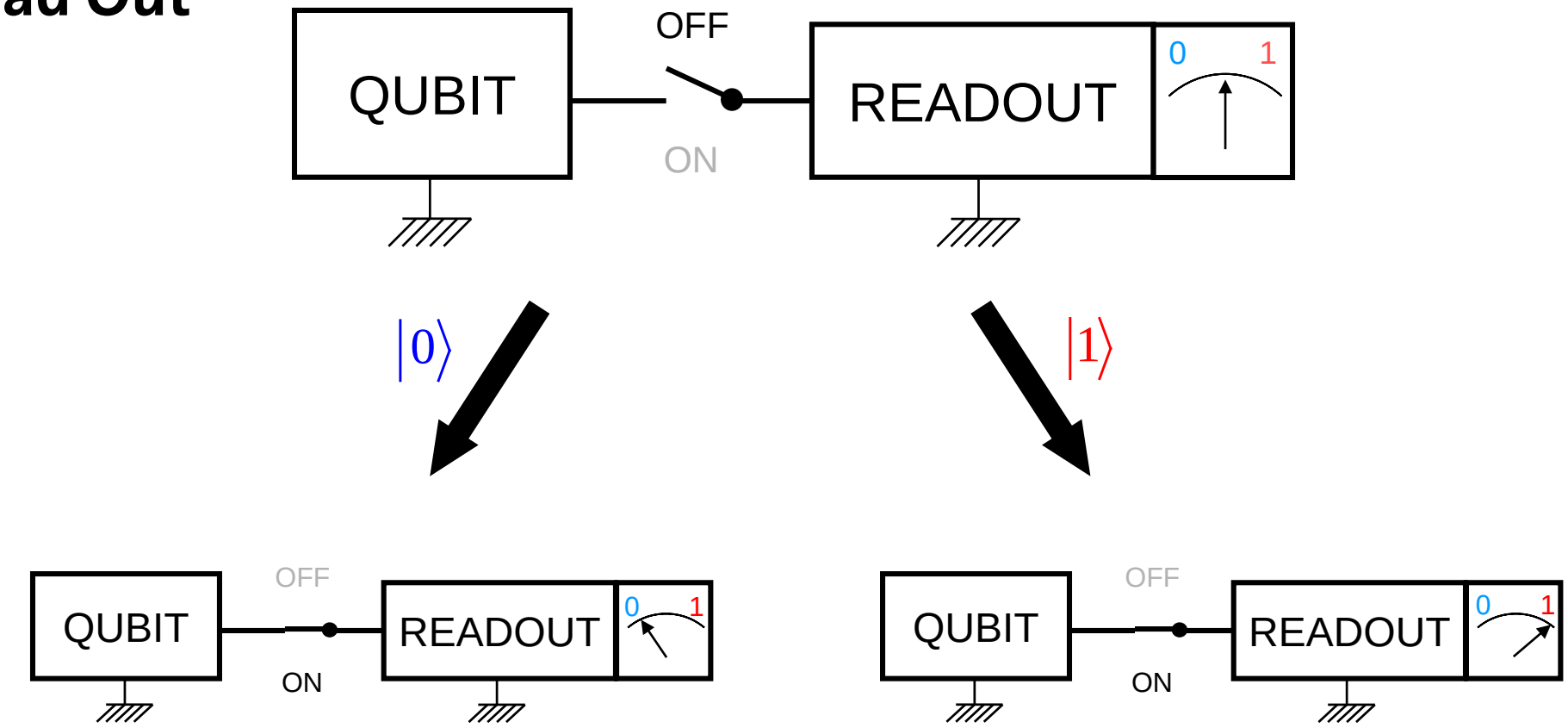

desired: good on/off ratio
no relaxation in on state (QND)

Coupled Transmon - Cavity system

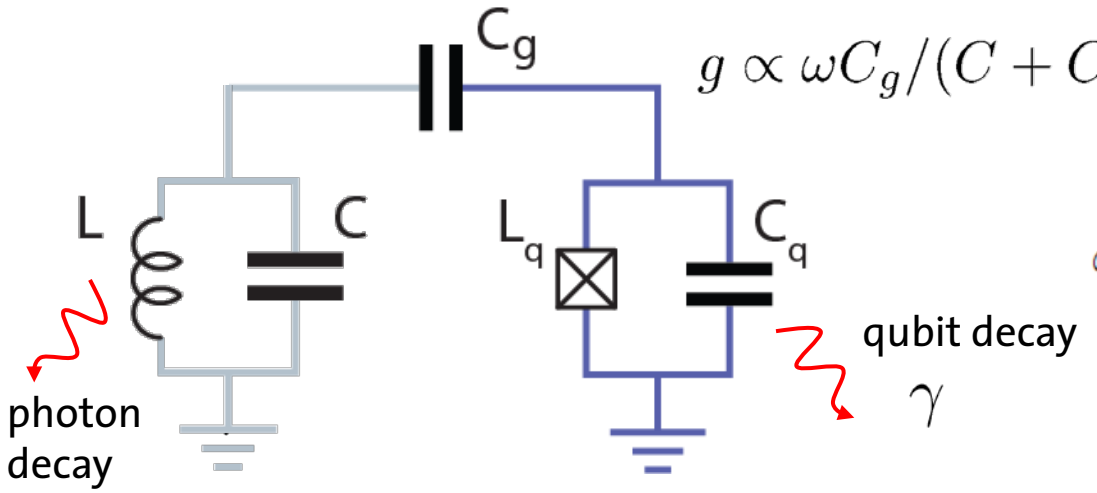

$$g \propto \omega C_g/(C + C_q)$$

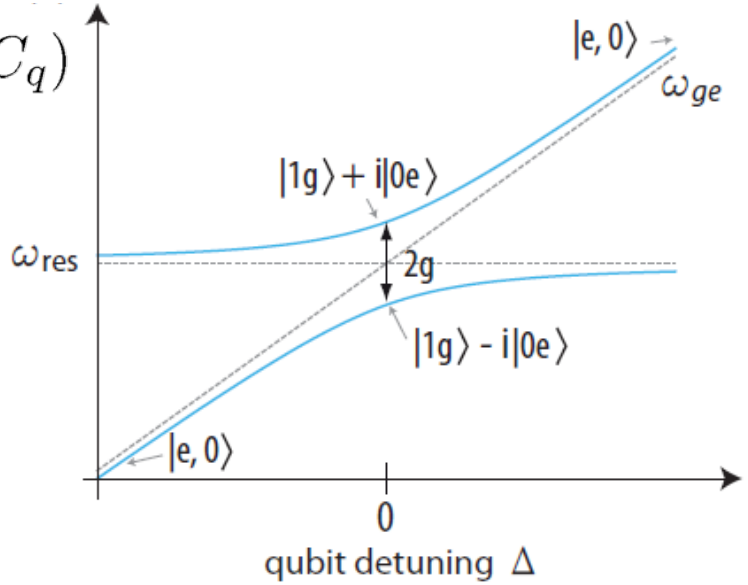

Jaynes-Cummings Hamiltonian:

$$H/\hbar = \boxed{\omega_r a^\dagger a} + \boxed{\frac{\omega_{ge}}{2}\sigma^z} + \boxed{g(a^\dagger\sigma^- + a\sigma^+)}$$

quantized field — qubit — coupling

Strong coupling limit:
$g > \gamma,\ \kappa$

$$\boxed{\chi\sigma_z a^\dagger a}$$

Dispersive coupling

What happens
in the limit of large detuning?

$$|\Delta| = |\omega_r - \omega_{ge}| \gg g$$

A. Wallraff e*t al.*, *Nature* 431, 162 (2004)

Derivation of Dispersive Hamiltonian

Discussion on the black board.

Dispersive Approximation of the J-C Hamiltonian

Jaynes-Cummings Hamiltonian

$$H = \hbar\omega_r\left(a^\dagger a + \frac{1}{2}\right) + \frac{\hbar\omega_a}{2}\sigma^z + \hbar g(a^\dagger\sigma^- + a\sigma^+)$$

Unitary transformation

$$\tilde{H} = UHU^\dagger \quad \text{with} \quad U = \exp\frac{g}{\Delta}(a\sigma^+ - a^\dagger\sigma^-)$$

$$\text{and} \quad \Delta = \omega_a - \omega_r$$

Results in dispersive approximation up to 2nd order in g

$$\tilde{H} \approx \hbar\left(\omega_r + \frac{g^2}{\Delta}\sigma_z\right)a^\dagger a + \frac{1}{2}\hbar\left(\omega_a + \frac{g^2}{\Delta}\right)\sigma_z$$

A. Blais, *et al.*, *PRA* 69, 062320 (2004)

Non-Resonant (Dispersive) Interaction

approximate diagonalization for $|\Delta| = |\omega_a - \omega_r| \gg g$ ⋮

$$H \approx \hbar\left(\omega_r + \frac{g^2}{\Delta}\sigma_z\right) a^\dagger a + \frac{1}{2}\hbar\left(\omega_a + \frac{g^2}{\Delta}\right)\sigma_z$$

//

cavity frequency shift

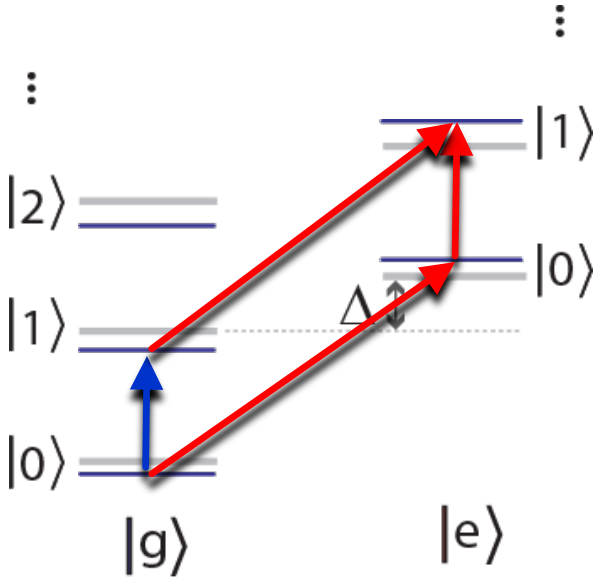

qubit detuned by Δ
from resontaor

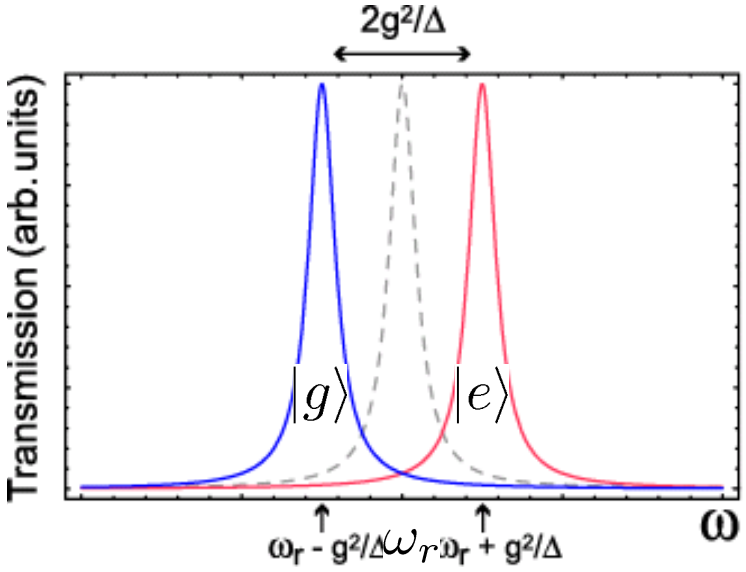

A. Blais *et al.*, *PRA* 69, 062320 (2004)
A. Wallraff *et al.*, *Nature (London)* 431, 162 (2004)
D. I. Schuster *et al.*, *Phys. Rev. Lett.* 94, 123062 (2005)
A. Fragner *et al.*, *Science* 322, 1357 (2008)

Dispersive Read-Out

approximate diagonalization in the dispersive limit $|\Delta| = |\omega_a - \omega_r| \gg g$

$$H \approx \hbar\left(\omega_r + \frac{g^2}{\Delta}\sigma_z\right) a^\dagger a + \frac{1}{2}\hbar\left(\omega_a + \frac{g^2}{\Delta}\right)\sigma_z$$

//

cavity frequency shift

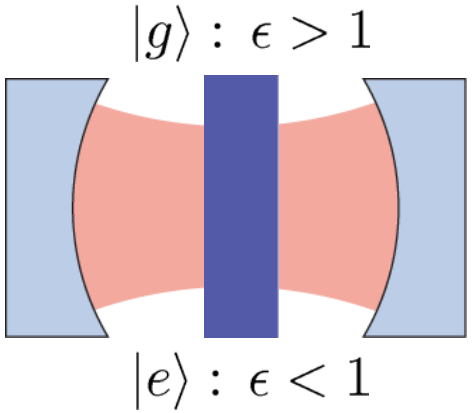

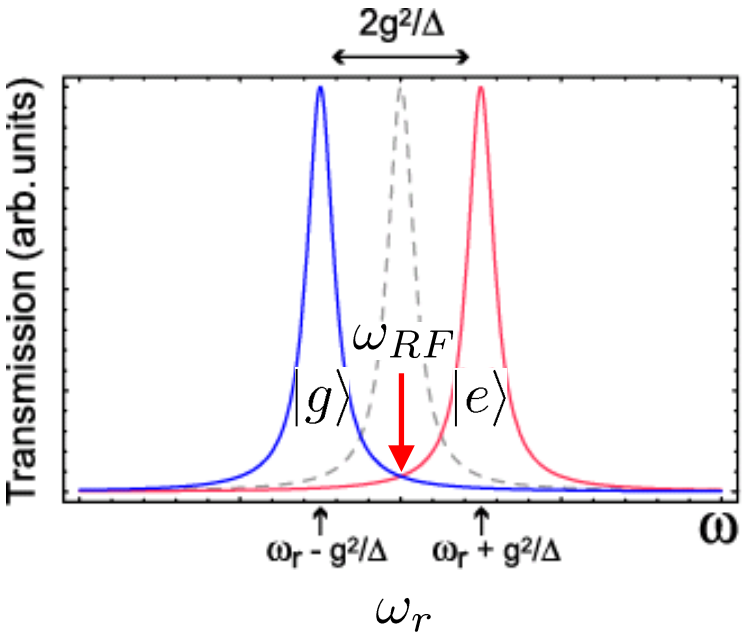

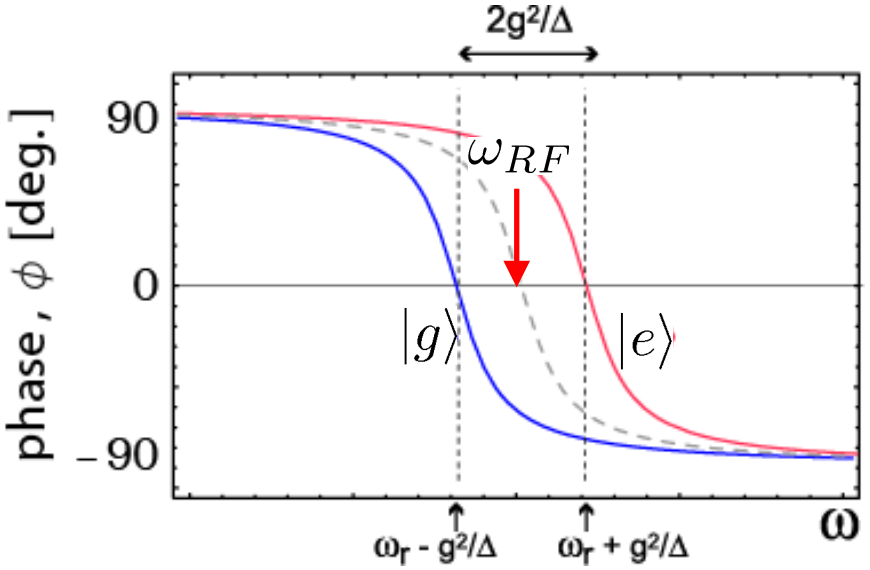

A. Blais *et al.*, *PRA* 69, 062320 (2004)

Characterizing Qubit and Resonator in Spectroscopy

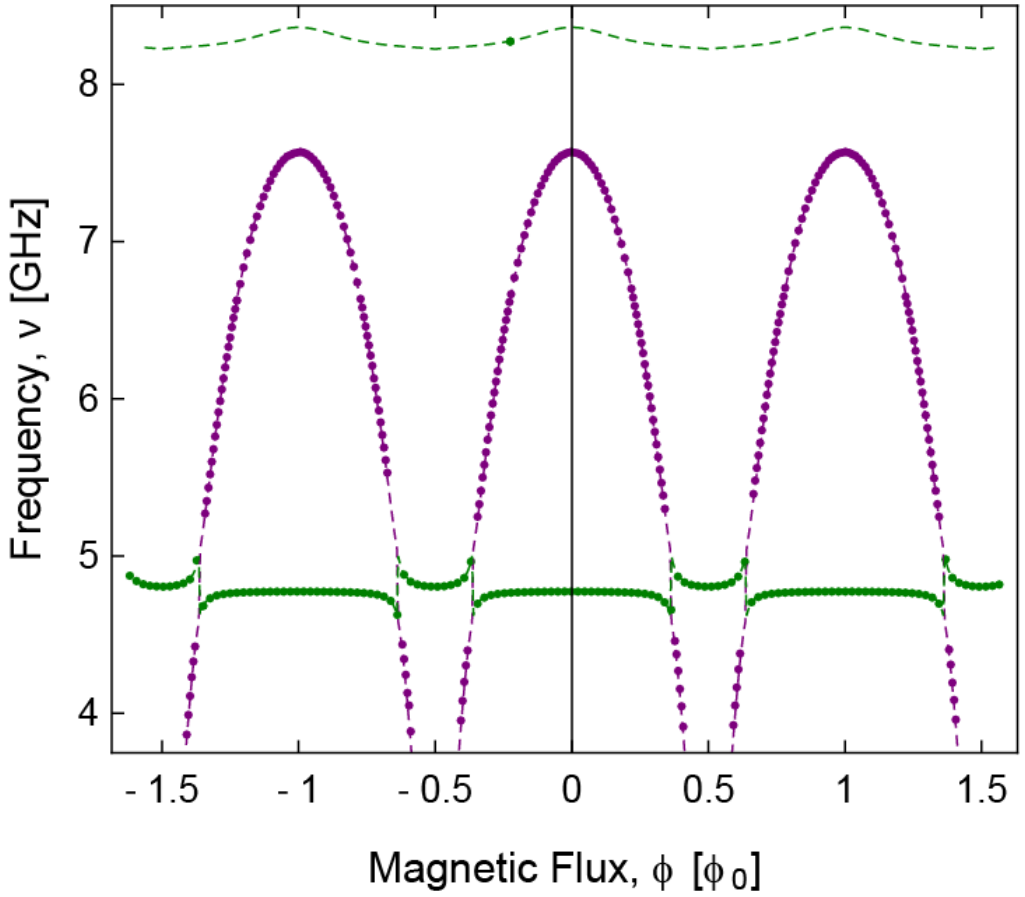

Measured qubit/resonator freq. (*,*)

Fit to full Hamiltonian (-,-)

Qubit Spectroscopy:

- Probe resonator at constant frequency
- Drive qubit at variable frequency
- When drive matches the qubit transition, change in transmission of resonator probe observed.

Qubit-Readout (Averaged)

Conventional HEMT

single-shot measurements:

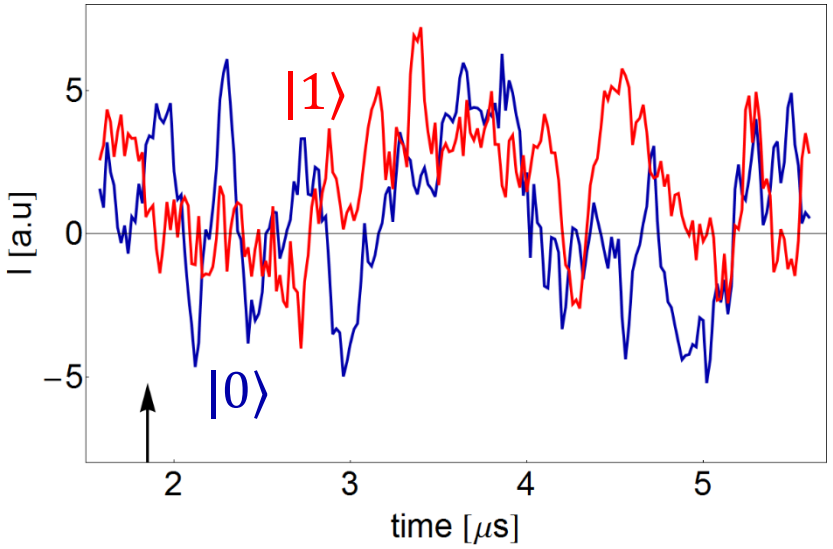

averaged measurements (8 10⁴):

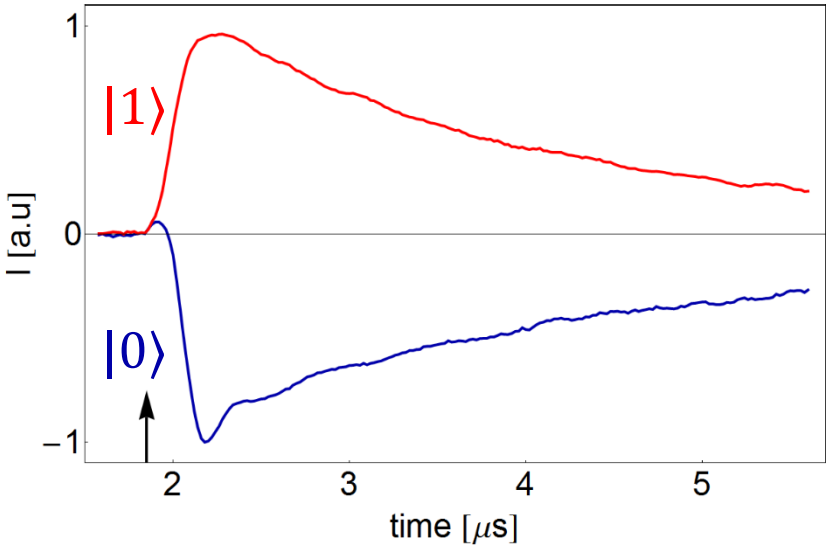

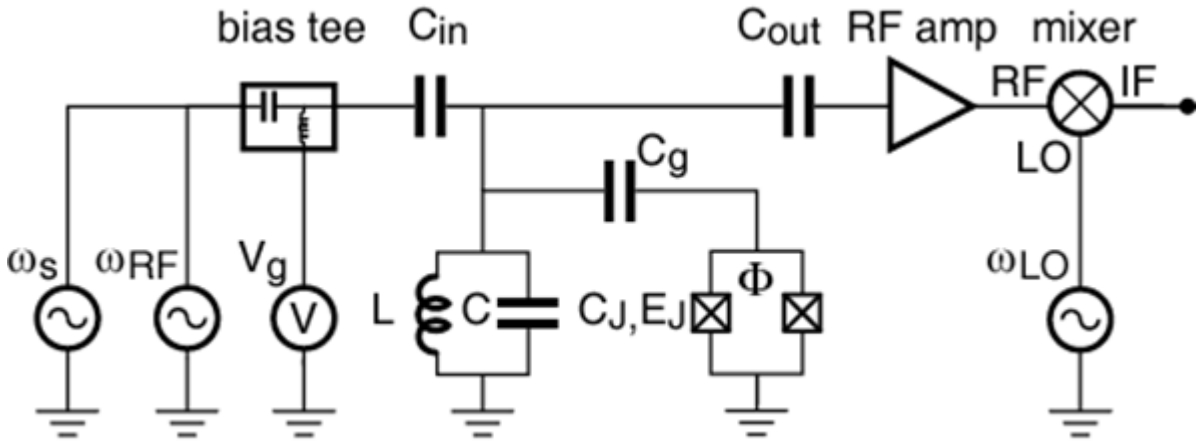

P. Kurpiers, Y. Salathe *et al*, *ETH Zurich* (2013)
R. Vijay *et al.*, *PRL* 106, 110502 (2011)

Improved using a Quantum Limited Amplifier

Conventional HEMT

single-shot measurements:

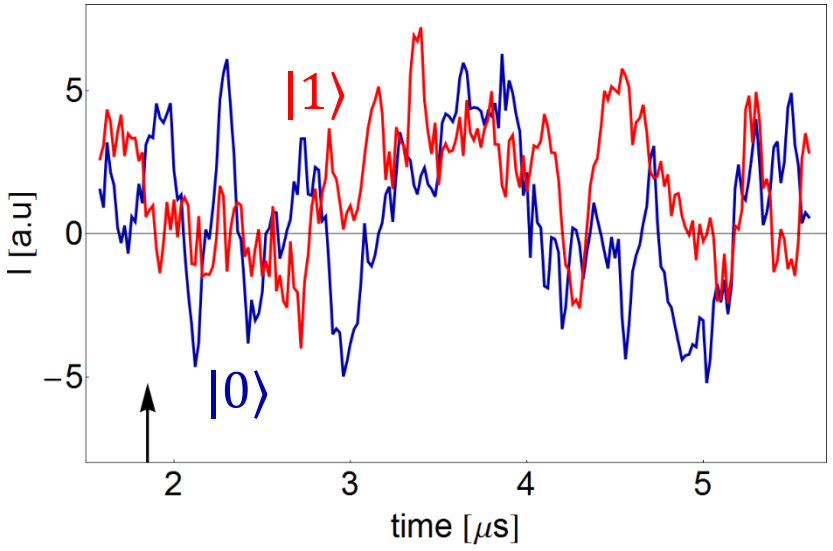

averaged measurements (8 10⁴):

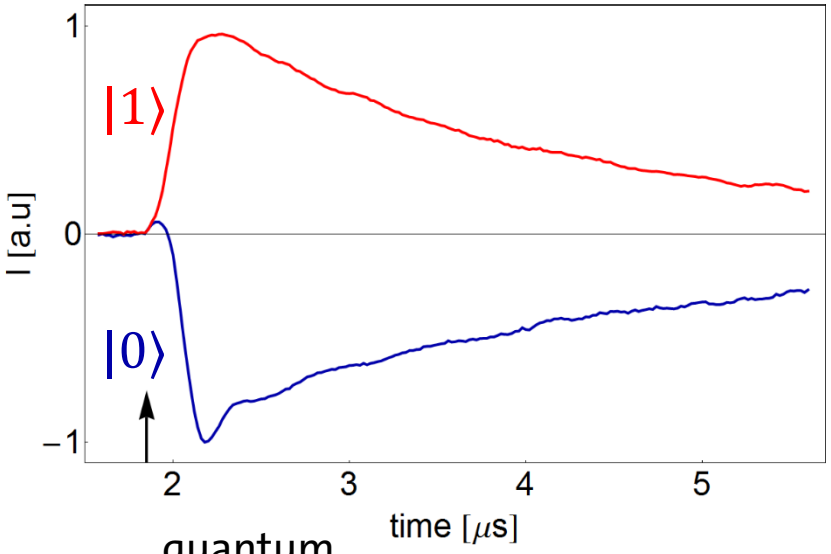

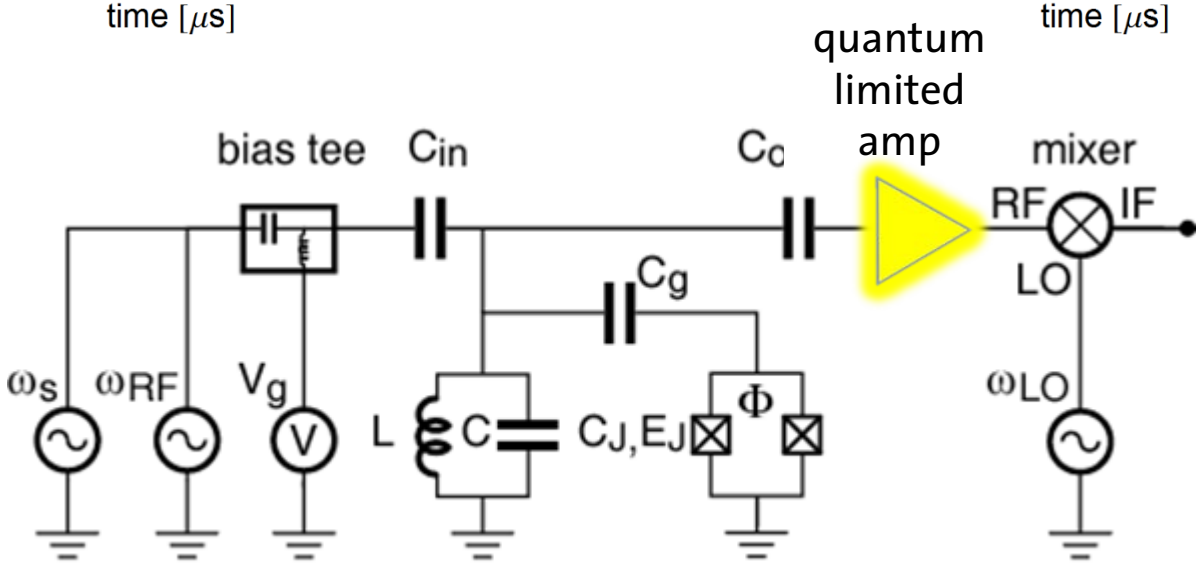

P. Kurpiers, Y. Salathe *et al*, *ETH Zurich* (2013)
R. Vijay *et al.*, *PRL* 106, 110502 (2011)

Single-Shot Single-Qubit Readout

single-shot measurements:

averaged measurements ($8\ 10^4$):

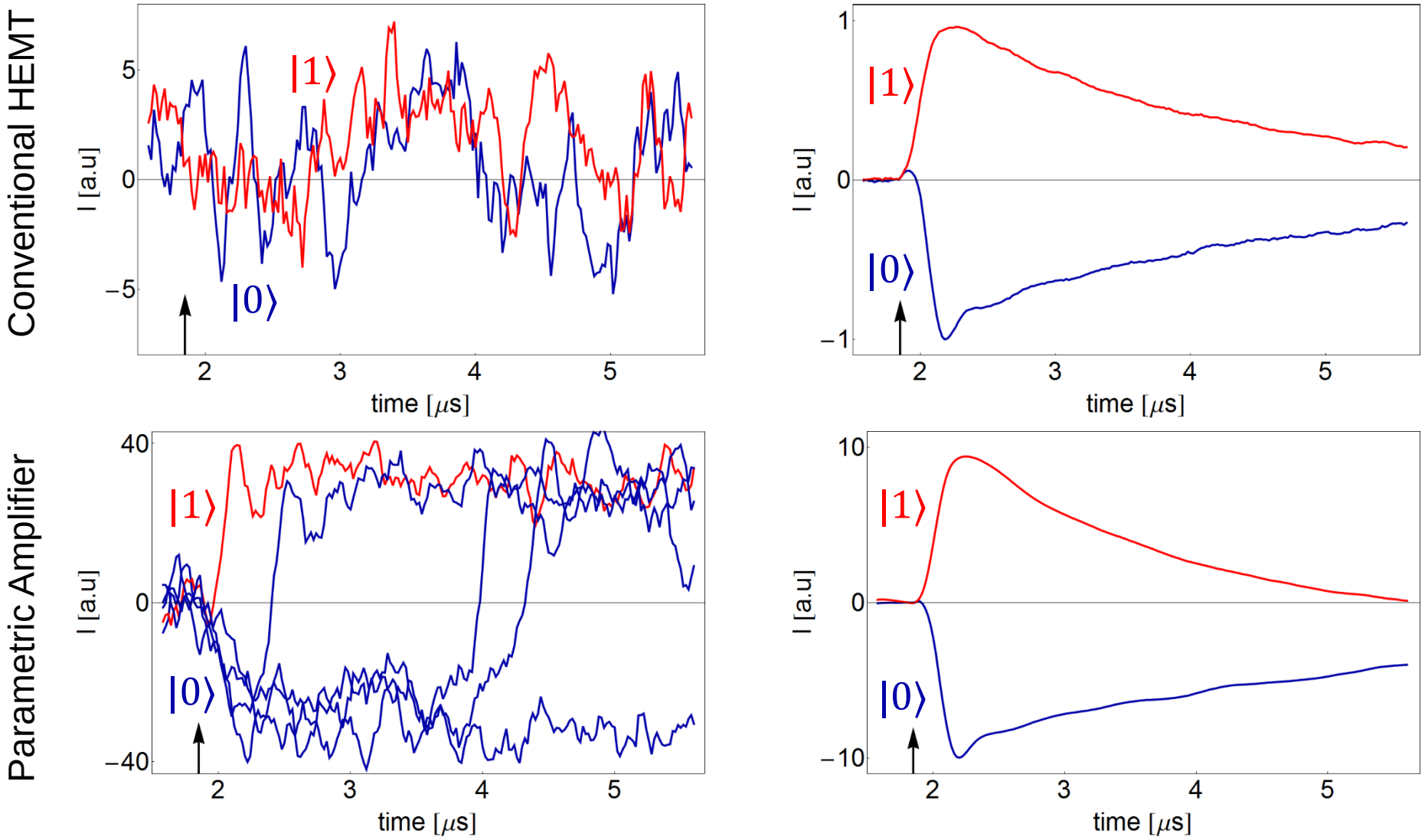

P. Kurpiers, Y. Salathe *et al*, *ETH Zurich* (2013)
R. Vijay *et al.*, *PRL* 106, 110502 (2011)

Statistics of Integrated Single-Shot Readout

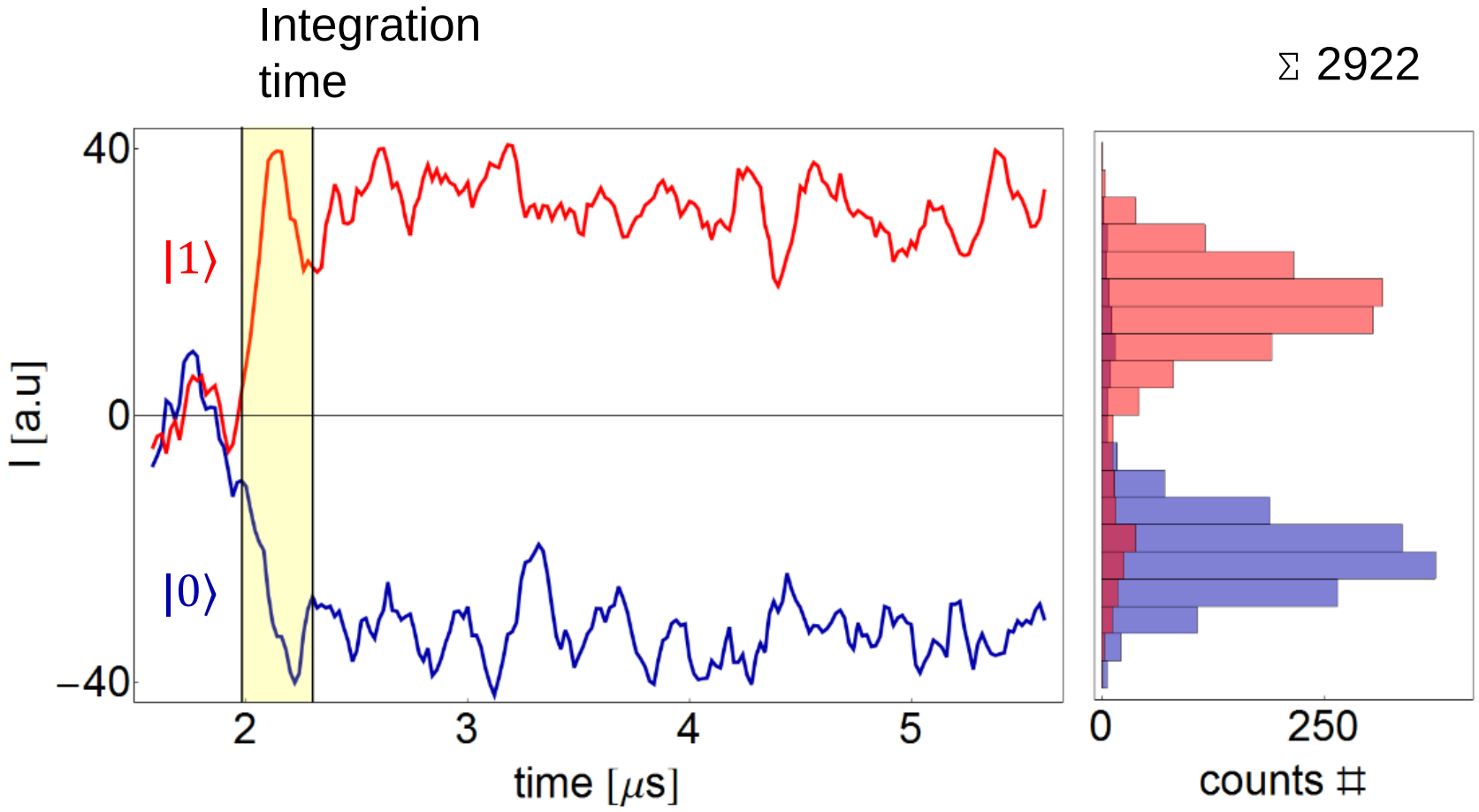

P. Kurpiers, Y. Salathe *et al*, *ETH Zurich* (2013)

Fast, High-Fidelity, Single-Shot Readout

Readout

- High fidelity: 98.3 %
- Fast: 72 ns integration time

With Purcell filter …

- Read out res. BW ~ 35 MHz
- Qubit T_1 ~ 8 μs

… and parametric amplifier:

- Phase sensitive
- BW ~ 20 MHz

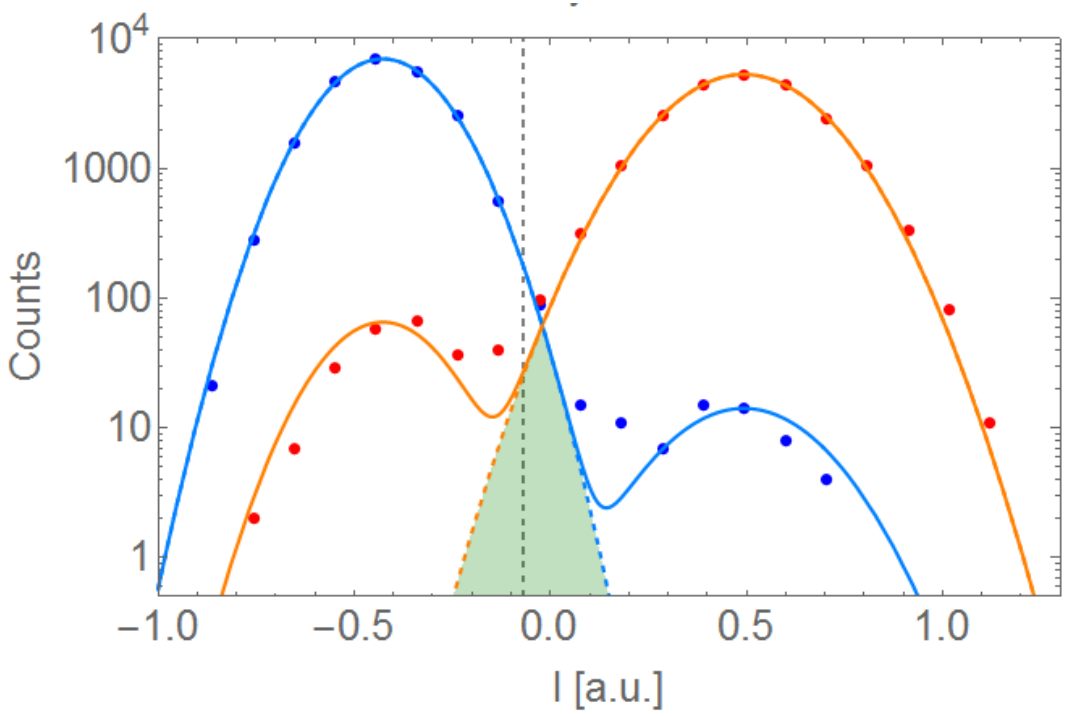

T. Walter, P. Kurpiers *et al.*, Quantum Device Lab, ETH Zurich (2016)

Parametric amplifier: Basic working principle

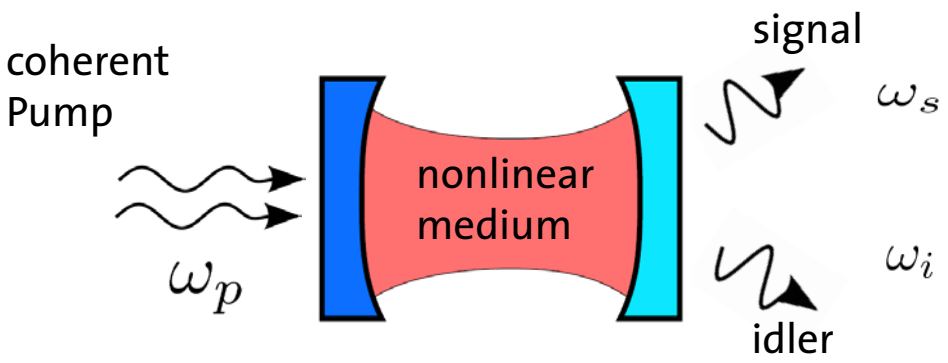

4-wave mixing: $2\omega_p = \omega_s + \omega_i$

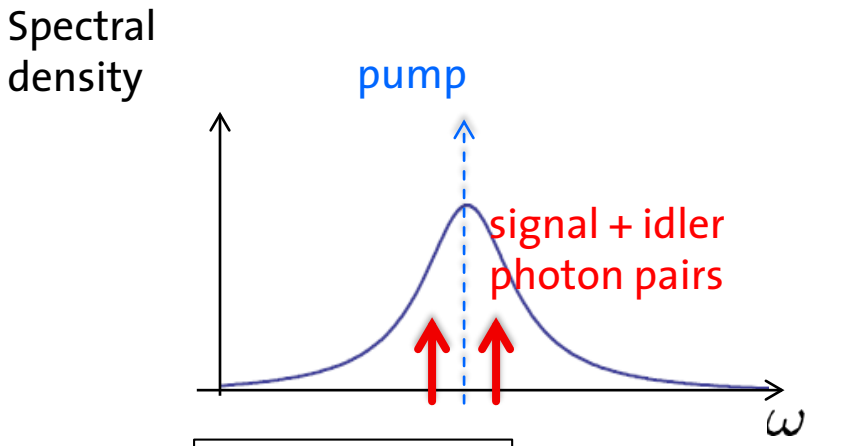

ω_s, ω_i occupy same mode → degenerate paramp

Conversion stimulated by:

1) vacuum fluctuations -> spontaneous parametric down-conversion (SPDC)
2) input (quantum) signals ->parametric amplification

Yurke *et al.*, *PRL* 60, 764 (1988)
Castellanos-Beltran et al., *Nat. Phys.* 4, 929 (2008)
Eichler and Wallraff, EPJ 1, (2014)

Near Quantum-Limited Parametric Amplifier

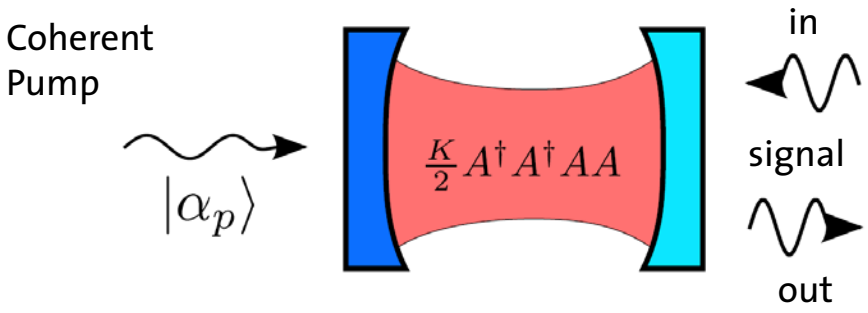

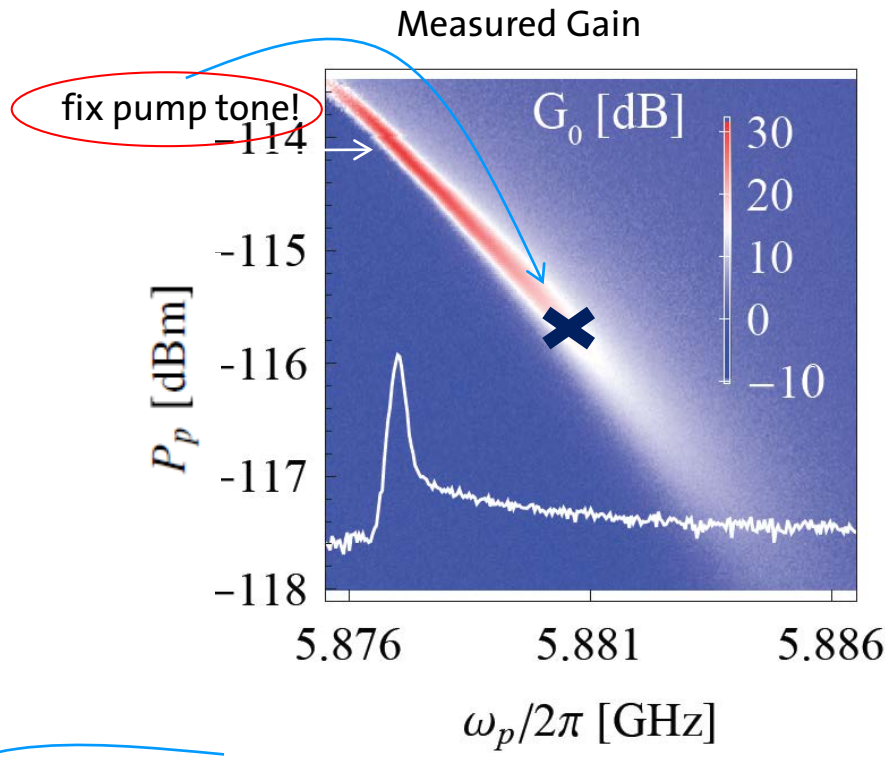

Circuit QED implementation:

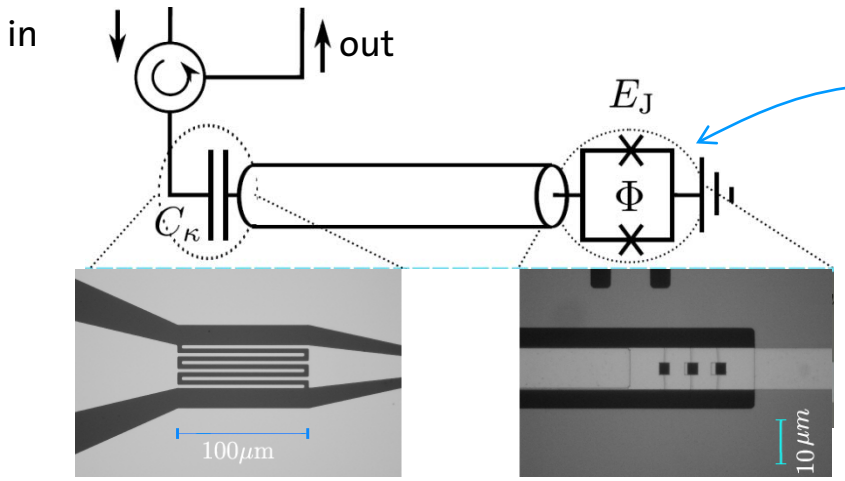

SQUID(-array) provides required nonlinearity

...many possible variations of this basic principle!

Eichler *et al.*, EPJ Quantum Technology 1, 2 (2014)
Eichler *et al.*, *Phys. Rev. Lett.* 107, 113601 (2011)
Eichler et al., *Phys. Rev. Lett.* 113, 110502 (2014)

Caves, *Phys. Rev. D* 26, 1817 (1982)
Yurke and Buks, *J. Lightwave Tech.* 24, 5054 (2006)
Castellanos-Beltran *et al.*, *Nat. Phys.* 4, 929 (2008)

Outlook:

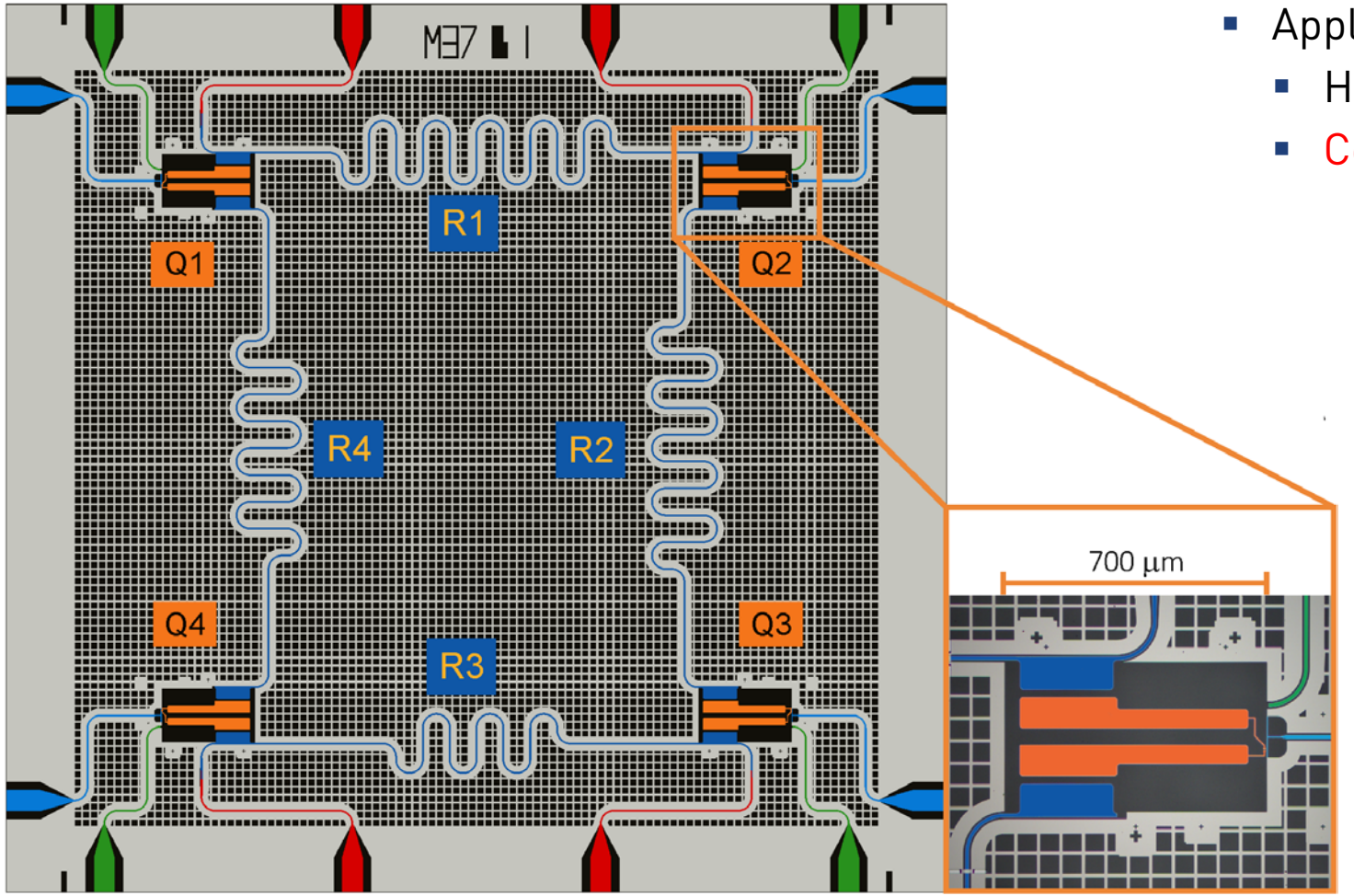

Building a quantum computer from electronic circuits

- Applications of cavity QED
  - High fidelity dispersive read-out
  - Coupling qubits and realizing 2-qubit gates

Two qubit interaction & The Cavity Bus

coupling through virtual excitation:

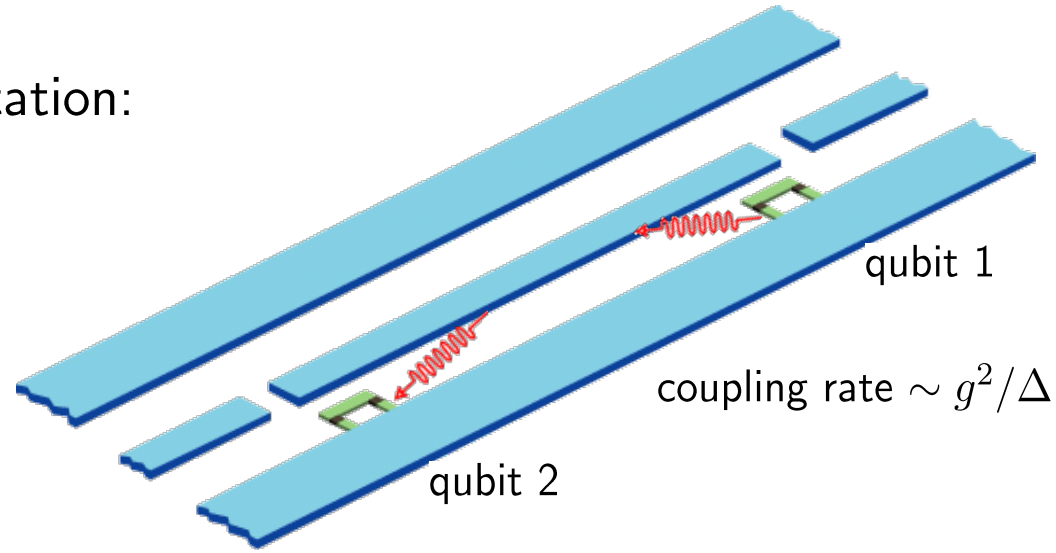

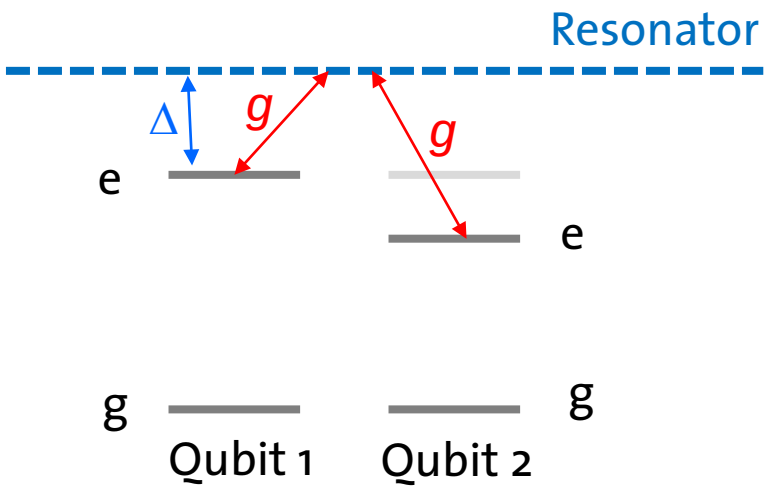

A. Blais et al., *PRA* **69,** 062320 (2004)
Majer et al., Nature **449** (2007)